I:\Creative Services\2008\CAD Production\Couture_08\Show Organizer\Options\Couture_08_WynnLa_10x10.dwg, 12/13/2007 8:59:23

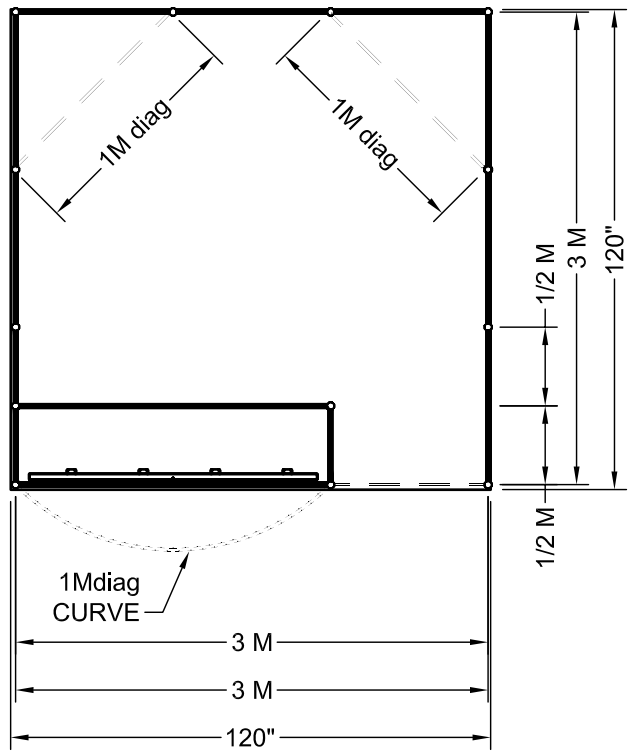

PLAN VIEW

SCALE: 1/4" = 1'-0"

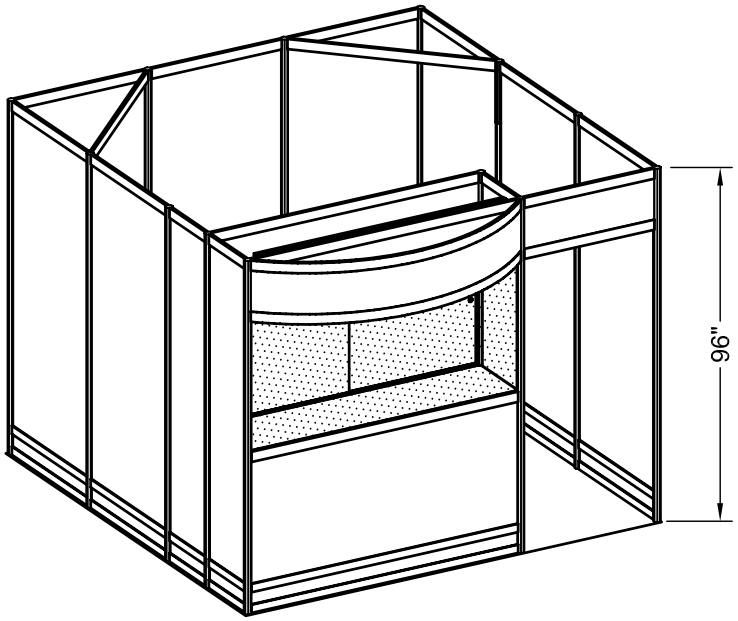

ISOMETRIC VIEW

SCALE: N.T.S.

10 x10 OPTION

QUESTIONS CALL:

AE: (cellular)
(nextel)

AM: (cellular)
(nextel)

GES.

Exhibits & Design
custom rental & modular exhibit services

REDLINES

#	DATE	BY	DESCRIPTION
-----	-----	----	
-----	-----	----	
-----	-----	----	
-----	-----	----	
-----	-----	----	
-----	-----	----	
-----	-----	----	

CLIENT:

SHOW: Couture

JOB NUMBER:	BOOTH NUMBER:	AE:	SHOW DATE:
LOCATION:		PM:	DATE:
PROJECT MANAGER / AE APPROVAL		DRAWN BY:	SHEET NUMBER: 1 OF 1

FILE NAME: Couture_08_WynnLa_10x10

Copyright © 2008 by GES Exposition Services,All rights Reserved No Part of this document may be reproduced, stored in any retrieval system, or transmitted in any form or by any means - electronic, mechanical, photocopying, recording or otherwise - without the express written consent of GES Exposition Services

7000 LINDELL ROAD., LAS VEGAS, NV 702.515.5500